Class #9: Experiment 9
Nodal Voltages, LTspice Simulation

Purpose: The objectives of this experiment are to gain some experience with the tools we use (i.e. the electronic test and measuring equipment and the analysis software) and to gain some fundamental understanding of voltage dividers.

Background: Before doing this experiment, students should be able to
- Identify nodal connections in a circuit
- Understand the difference between voltage difference measurements and nodal voltage measurements
- Download and install software circuit simulation software on a laptop computer

Learning Outcomes: Students will be able to
- Simulate a circuit containing a resistive network and identify the nodal voltages in the simulation.
- Be able to set up the numerical analysis of simple resistive circuits driven by constant voltage sources.
- Apply series and parallel resistor properties to determine nodal voltages in a ladder circuit.
- Design a ladder circuit to obtain specific nodal voltages.

Equipment Required
- None

Pre-Lab

Required Reading: Before beginning the lab, at least one team member must read over and be generally acquainted with this document and the other **required reading** materials listed on the course website.

Hand-Drawn Circuit Diagrams: Before beginning the lab, hand-drawn circuit diagrams must be prepared for <u>all</u> circuits either to be analyzed using SPICE or physically built and characterized using your M1K board.

Background

Nodes: In a circuit, the connections between different components are called nodes. In Figure A-1, the voltage source V1 is connected to resistor R1. The nodal connection has been labelled as **A**. Likewise, the nodal connection between R1 and R2 has been labelled **B** and the nodal connections between R2 and V1 has been labelled **C**.

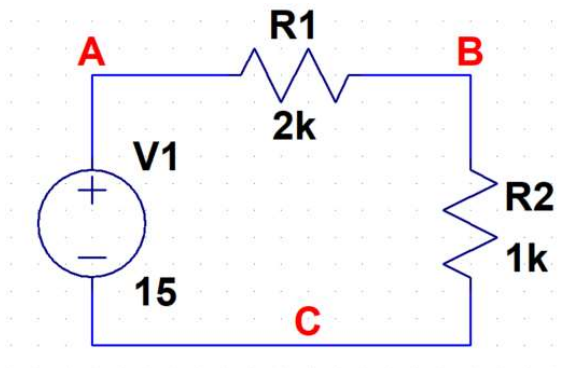

Figure A-1. Example of Nodal Connections

One thing to be careful of is that nodal connections are not always at corners or junctions. For example, the node **B** in the Figure A-2 circuit connects to four resistors, R1, R2, R3 and R5. Likewise, node D connects to the voltage source, V1, and resistors R2, R3 and R4.

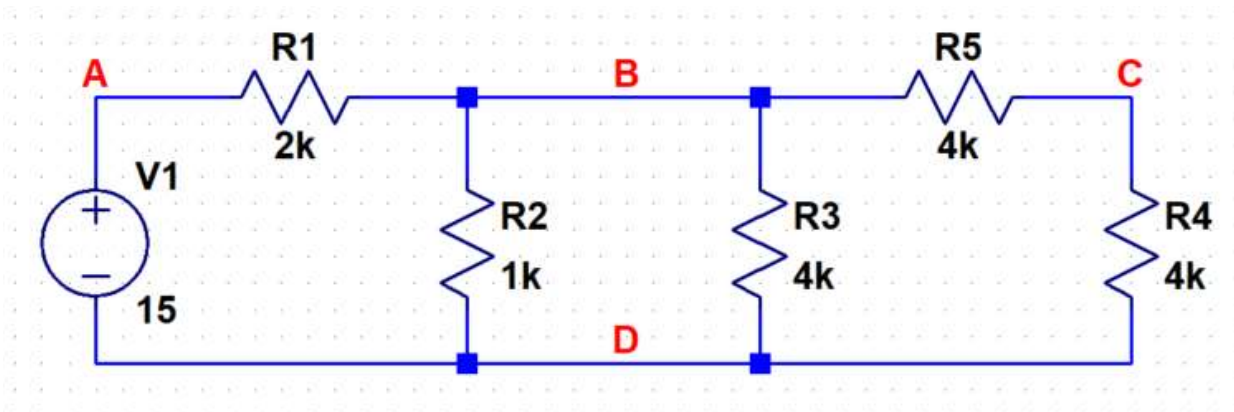

Figure A-2. More Complicated Example of Nodal Connections

***Voltage Differences*:** In effect all voltage measurements are the difference in voltage between one location and another location. When we use the Alice voltmeter tool, we connect CH A to one location (node) and CH B to another location (node). The voltmeter then measures the difference between those two nodes, (CA-V – CB-V). In experiment 6, we used both channels to measure the voltage across combinations of resistors.

Voltage sources are by definition voltage differences. The 1.5V battery we used, has (approximately) a 1.5V difference between the two leads. In the circuit in Figure A-2, the voltage source connects to nodes **A** and **D**. We can then say that the voltage difference between those two nodes is V_A-V_D = 15V. Note, the expression is written that way since node **A** connects to the positive side of V1 and node **D** connects to the negative side of V1. What is important to note is that we don't know the voltage at those nodes, only the difference between them. In order to know the voltage at a node, we have to define a ground (or common).

Ground: A somewhat arbitrarily picked node that we define as 0V. In practice, a ground is designated as a reference voltage and defined as zero. Unlike other physical characteristics (temperature, pressure, etc.), there is no physical condition that is defined as zero volts. Voltage is always a voltage difference (as mentioned above) and a ground

designation is used as a reference for interconnected circuits such that they have a common reference. In the circuits in Figures A-1 and A-2, we can designate any of the nodes as a 0V ground and it will not change the voltage differences measured in the circuit. Typically, we choose the node at the 'bottom' of the circuit as a common ground (0V), but that is only for convenience and not required.

LTspice software download link:
https://www.analog.com/en/design-center/design-tools-and-calculators/ltspice-simulator.html

LTSpice: The software we will be using to simulate the operation of circuits in this course is called *LTspice IV* which takes information on a circuit and analyzes how it will behave. When placing parts in the circuit, resistors, capacitors, inductors, diodes and wires all have their own symbols in the menu. All other parts are accessed through the "Place Parts" button. Once the parts are places, their values must be specified. This is usually done by right clicking your mouse on the circuit element or one of its parameters. Once the circuit is complete, the simulation must be setup. This is done through the 'Simulate' drop down menu. The example below shows a DC simulation that determines select voltages and currents in the circuit. Figure A-3 contains a familiar voltage divider circuit with common hotkeys and component values indicated.

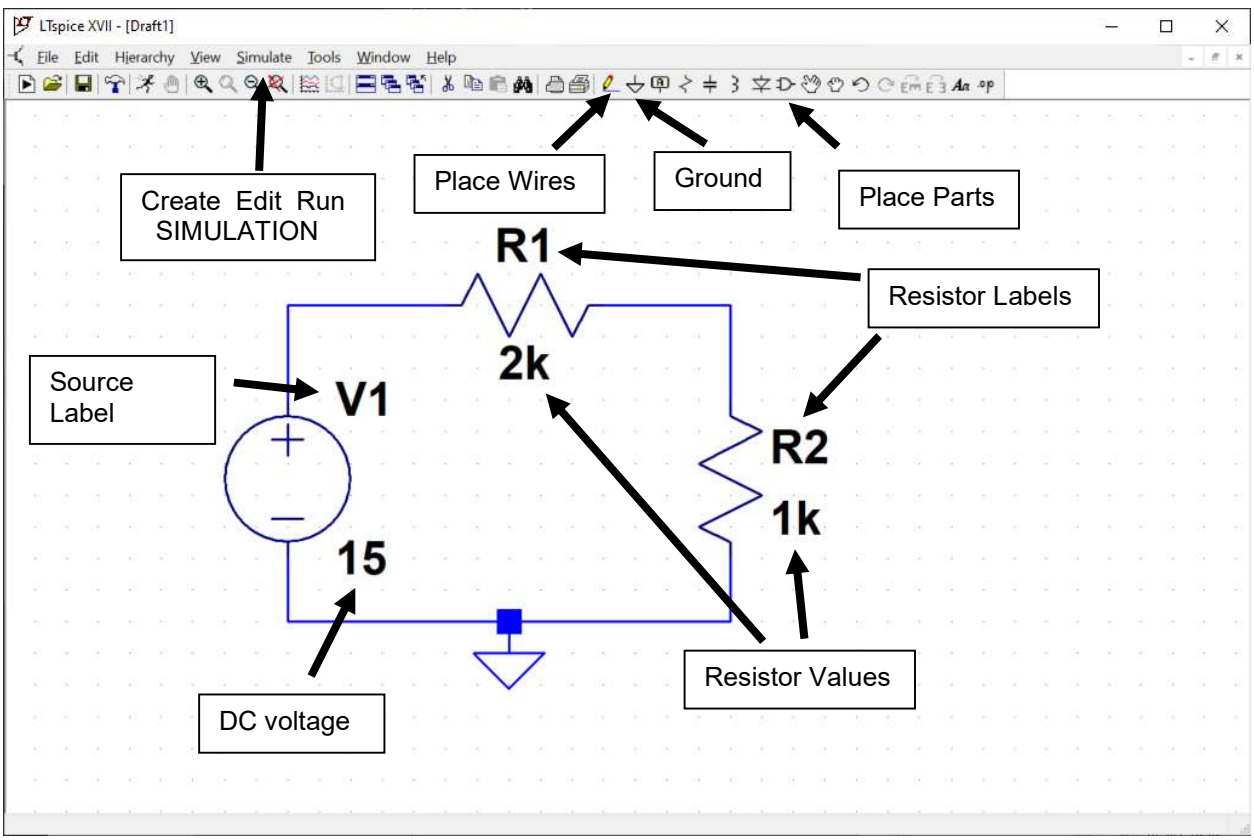

Figure A-3. LTspice Schematic Window (with descriptions)

Part B Example (Simulation)

Opening a New Simulation
In this part of the experiment, we will draw the simple circuit we have been studying, a combination of resistors and a DC voltage source representing a voltage divider with voltages measured by M1K board.

- Run the "*LTspice IV*" program

- It will open with no existing simulation. Click on the *File* pull-down menu and select *New Schematic* (or use the hotkey on the far left). You will name your project when you save it. You should also decide where you want to save schematics. You will have to choose a directory when you save your work.

Drawing a Circuit

- Using the hotkeys (Figure A-3,), select and place a resistor on the schematic. It should have a label R1 with a value that still needs to assigned (R). Place a second resistor and it should have a label R2 and also a value that still needs to be assigned. (To rotate a resistor, type ctrl-r while it is highlighted.)
- Again, using the hotkeys (Figure A-3,), place a ground near the bottom of the circuit. Note, a ground is not a component, but rather an assigned reference voltage (as discussed previously.
- To place a voltage source, we need to use the Parts hotkey (Figure A-3,). In the text box at the center right, type voltage(Figure B-1) and then hit return. Place the source on the schematic. Your circuit should look similar to that seen in Figure B-2.

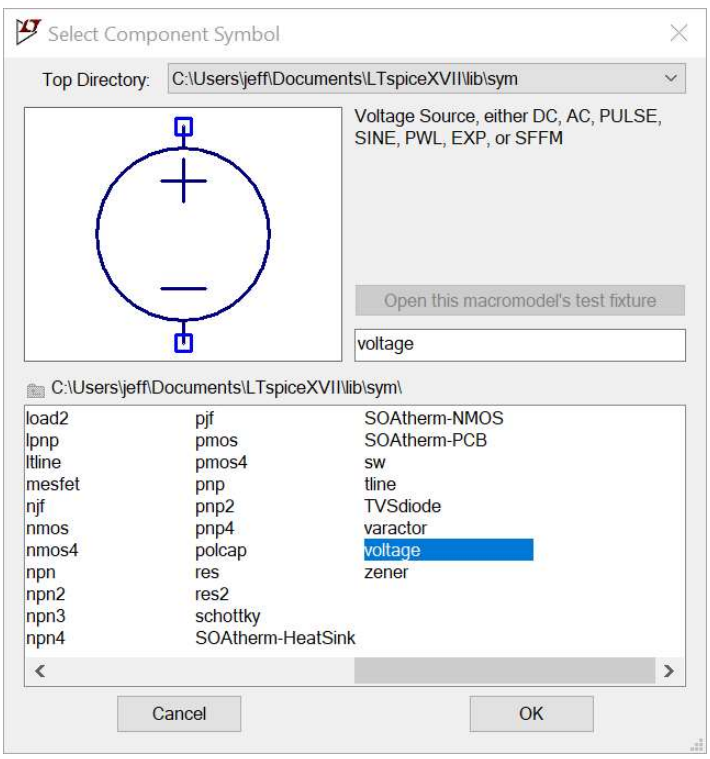

Figure B-1. LTspice Parts Window

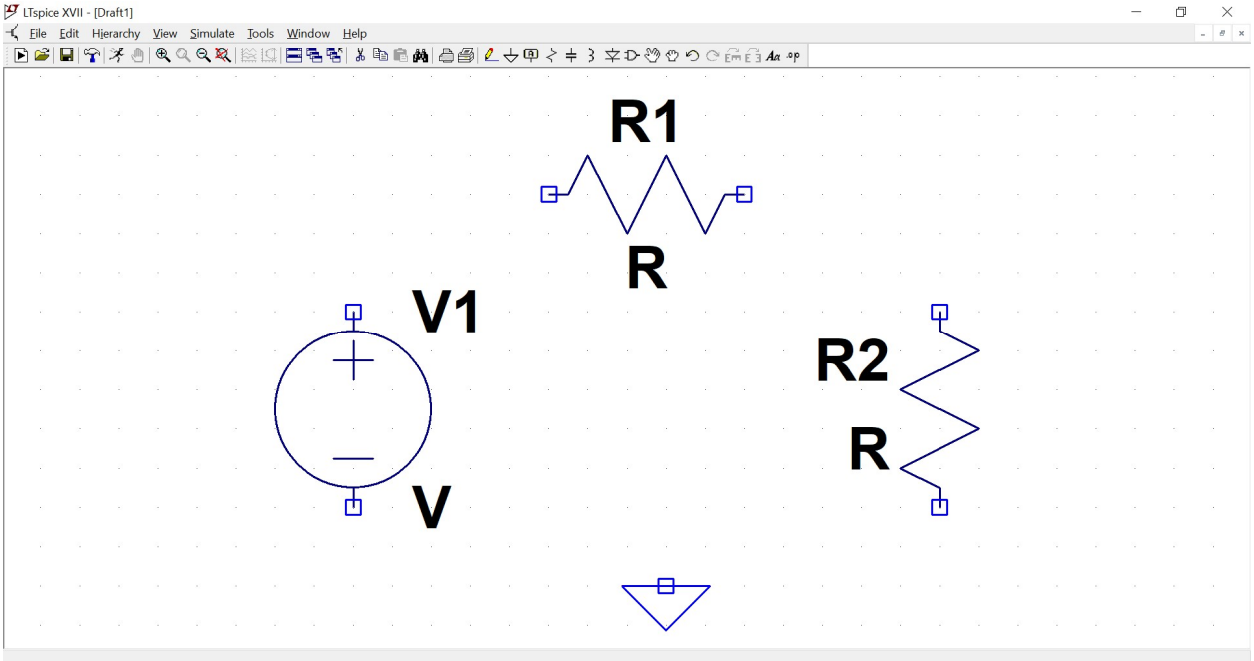

Figure B-2 Circuit Components (and ground reference)

- We need to add wires connecting the components. Again, select the wire hotkey button, and connect the components to create a voltage divider circuit with a ground reference. Your circuit should look similar to Figure B-3.

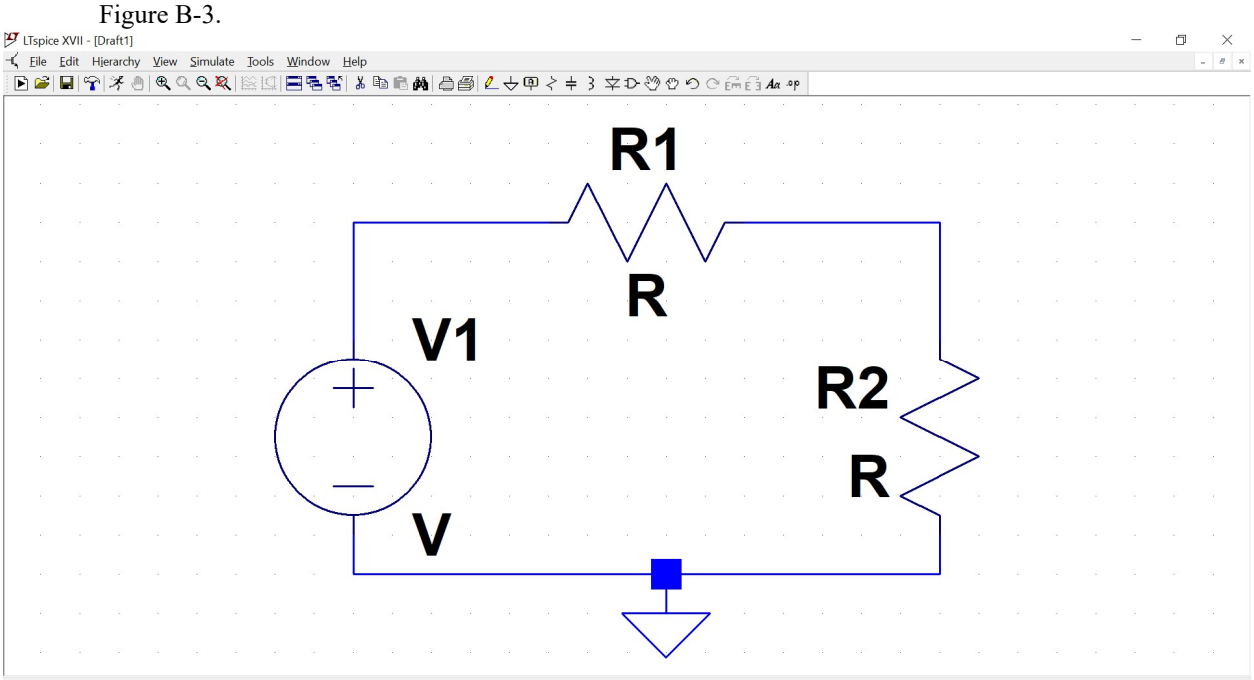

Figure B-3 Completed Circuit (and ground reference)

- The component values now should be set. There are couple ways to do that. For the resistors, the easiest way to set the value is to right click on the R and then enter the desired value. Set R1 to 1k and R2 to 2k. Similarly, for the voltage source, right click on the V and set the voltage to 15V.
- The circuit is ready for simulation. However, it will make analysis easier to add node labels to the circuit. There are three nodes (as seen Figure A-1). To add labels, right click on the wire between components and

select the Label Net option. (Figure B-4). In the text box, give the node a label. In the example, the letters A, B and C were assigned as labels for each node. After assigning a label to each node, your circuit should appear similar to that shown in Figure B-5

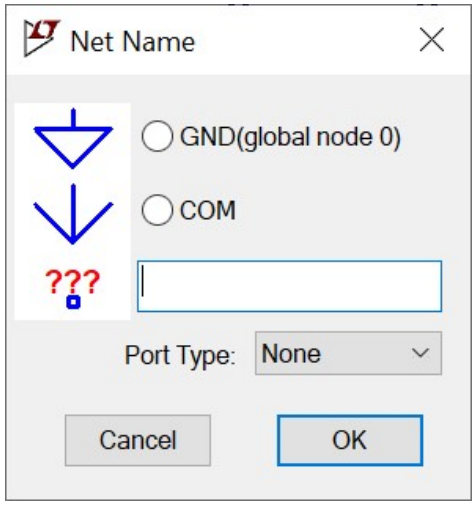

Figure B-4 Assigning Node Labels

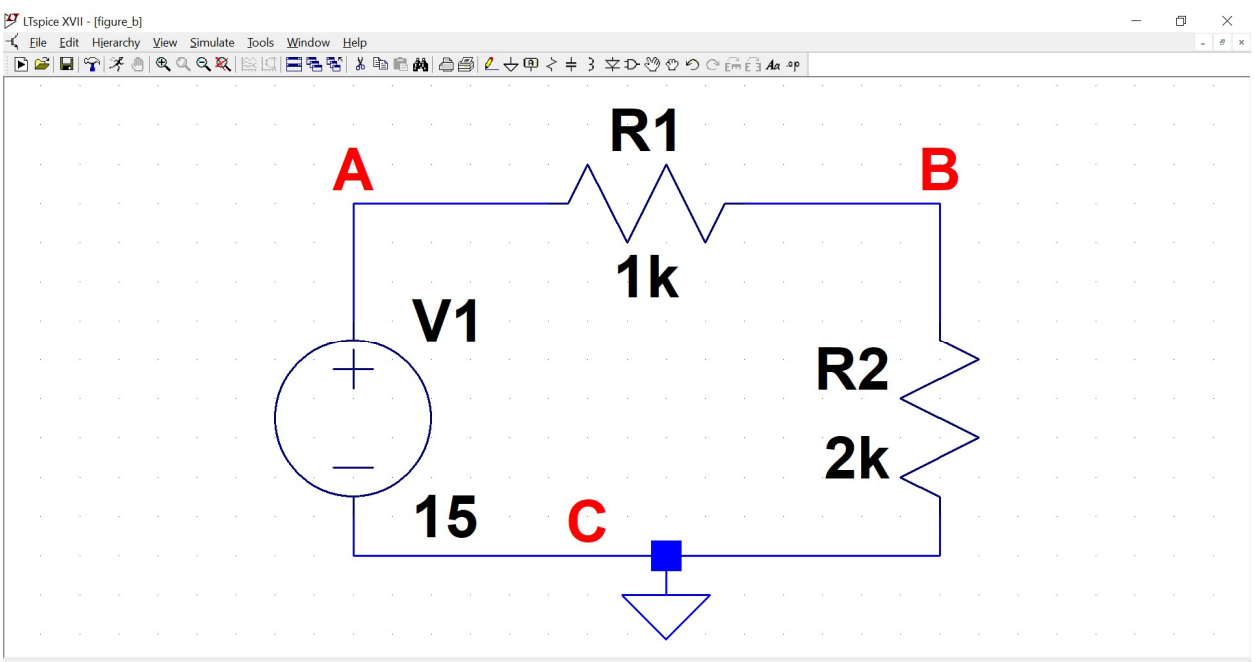

Figure B-5 Circuit with Nodes

- After setting up the circuit layout, we are now ready to setup the simulation parameters. Click on the Simulate drop down menu and select Edit Simulation Cmd. We are going to calculate the DC operating point which will work similar to the voltmeter. Select the' DC op pnt', click OK, and drop the .op command anywhere on the circuit schematic. The final layout will appear as shown in Figure B-6

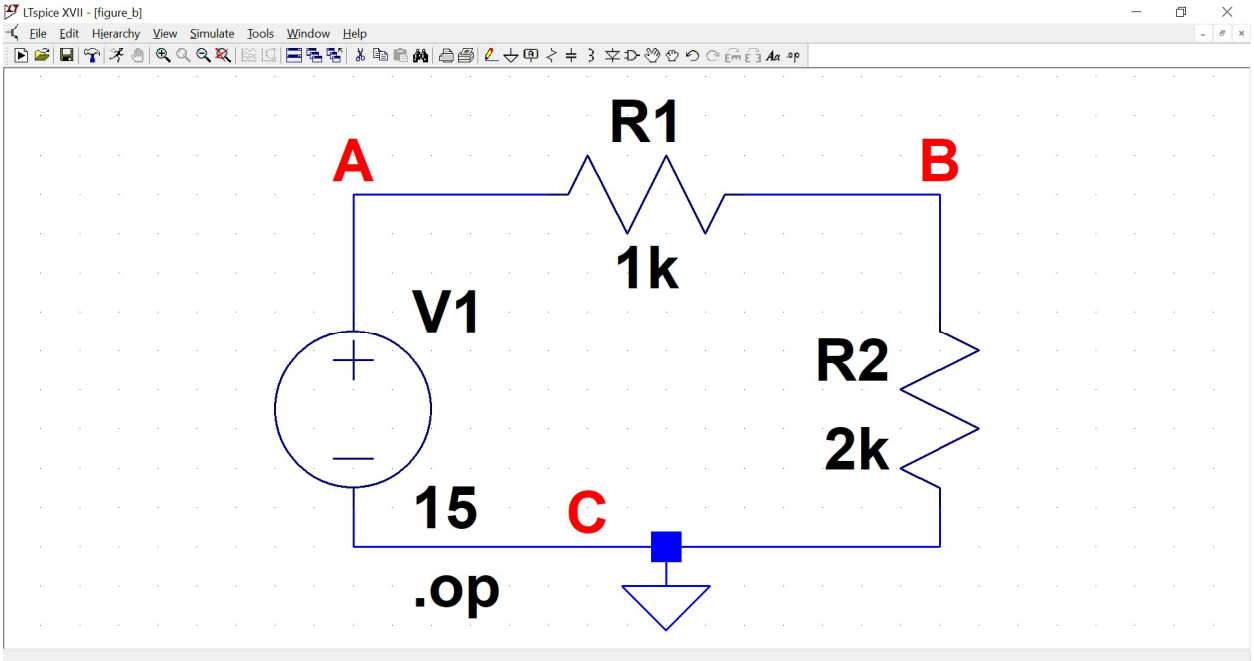

Figure B-6 Finished Layout

- The DC voltages can be obtained by running the simulate. Click the running man hotkey  . All the DC values will be reported, including the voltage at the nodes and the current through components, as seen in Figure B-7. The voltages at the nodes are identified as V(b) and V(a) (lower case). V(c) is not provided since it is a ground reference and considered to be known.

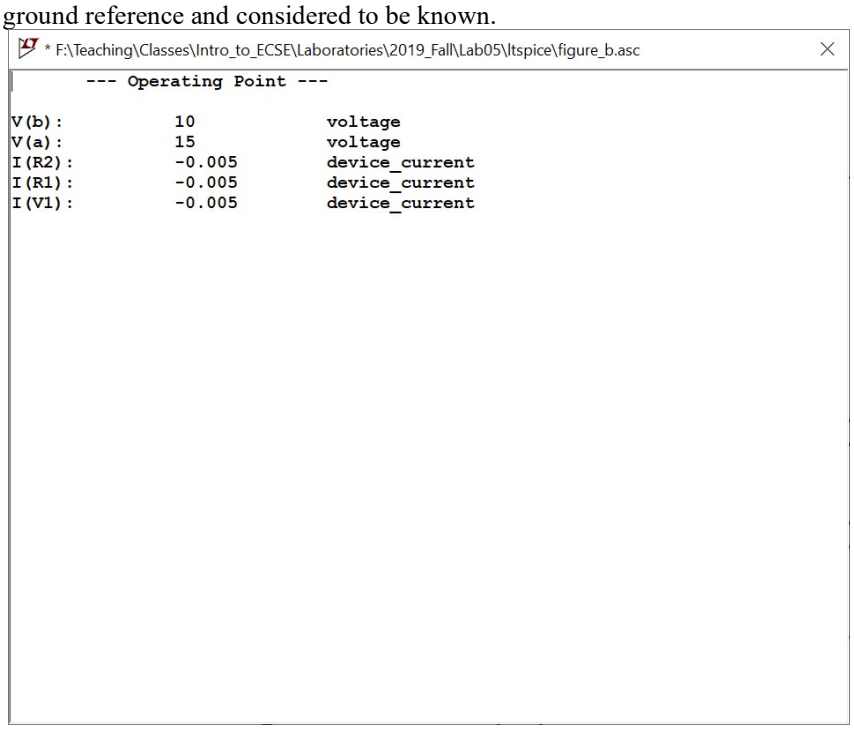

Figure B-7 DC Voltages and Currents

- As a final observation, we see that the voltage across R1 is VR1 = V(a)-V(b)=15-10=5V and the voltage across R2 is VR2 = V(a)-0=10-0=10V. Both of these values can be verified using the voltage divider equation seen in previous labs.

Experiment

Part C – Identifying nodes
Practice identifying nodes using the following circuit, Figure C-1. Label all the nodes, including the provided ground. The voltage source (voltage difference) that is connected to ground can be used to determine the voltage at one of the other nodes. Identify that node and its indicate its voltage.

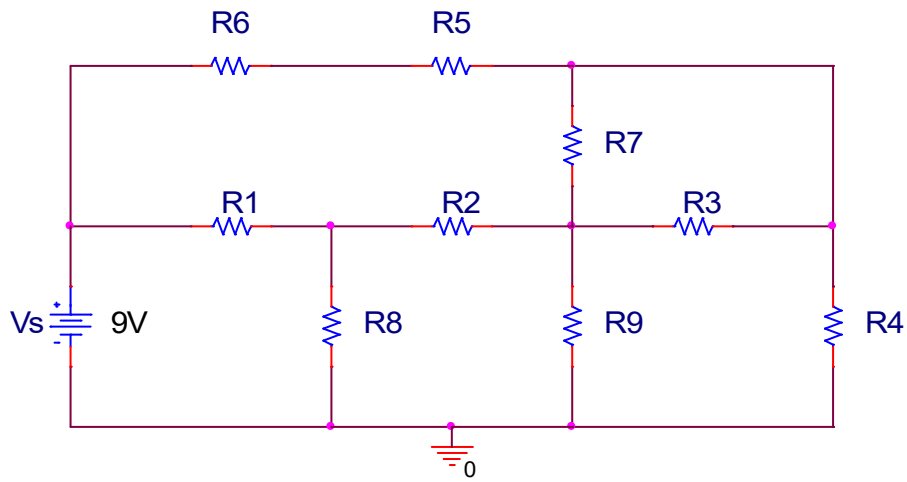

Figure C-1 Practice Circuit

Part D - Simulation

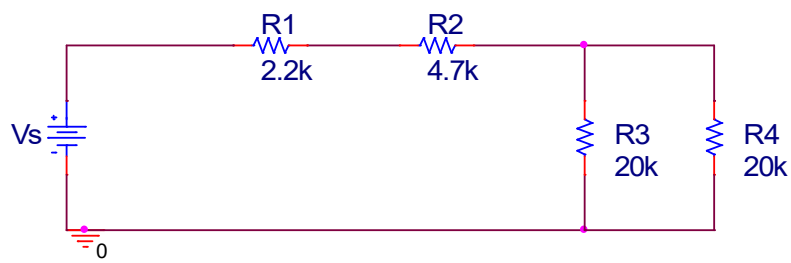

- In LTspice, implement one of the circuits from experiment 6 (Fig. B-1 in experiment 6 write-up). Using the process detailed earlier, label every node.
- Set the source voltage to 4V and run a DC simulation.
- Use your results to find the total voltage across the parallel resistors, R1 and R2. Do the simulation results compare to the measurements from experiment 6?
- Use your results to find the total voltage across the series resistors, R1 and R2. Do the simulation results compare to the measurements from experiment 6?
- Voltage dividers can be applied to any two resistors in series, as long as the total voltage is known. Using the total voltage you just determined, apply the voltage divider equation to find the voltage across each individual resistor, R1 and R2.
- Repeat the simulation for Vs = 1V, 2V, 3V, and 5V. For each run, record the total voltage across resistors R1 and R2.
- Using the data from each source voltage (including 4V), plot the total voltage (y-axis) vs. the source voltage (x-axis). Using concepts we have seen previously, how would you describe the plot?
- Set Vs to 4V again, delete the ground (scissors icon) and move it to the node between resistors R1 and R2. Run the DC simulation and once again find the total voltage across resistors R1 and R2. The nodal voltages should have changed. Did moving the ground change the voltage difference?

Part E – Summarizing our experiences

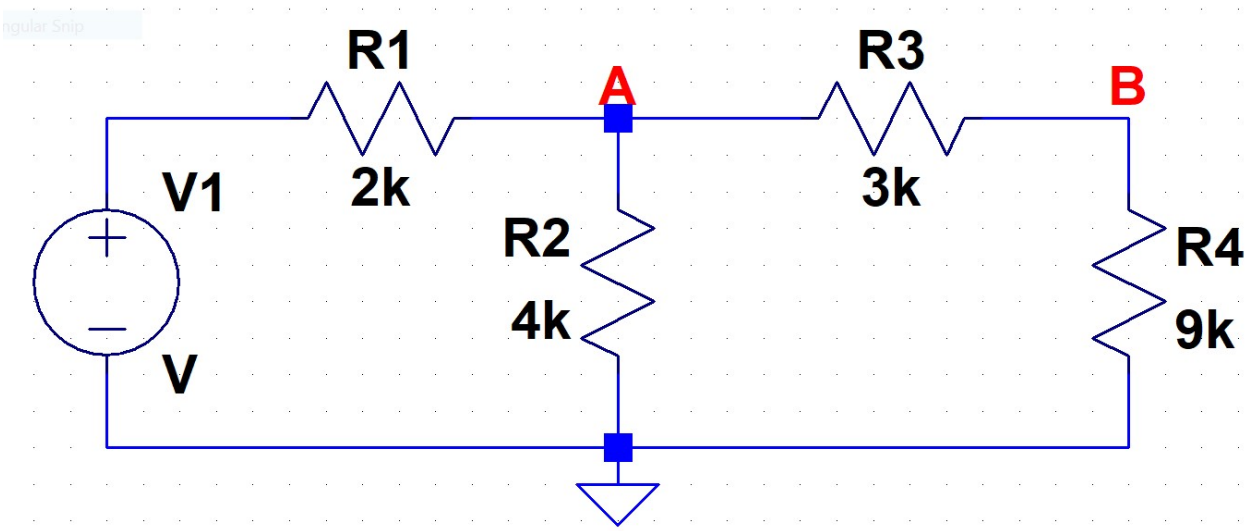

In the above circuit, we can apply a successive set of concepts (series resistors, parallel resistors, voltage divider) to find that the voltage at A (for the indicated ground) is given by the expression,

$$V_A = \frac{3}{5} V_1$$

- Using the concepts mentioned, verify that the above expression is correct.

The voltage divider can be applied to obtain the voltage at B, given by the expression,

$$V_B = \frac{3}{4} V_A$$

- Verify that the above expression is correct.
- For V1 = 5V, implement the circuit in LTspice and verify that the above equations are correct. b

There are alternative approaches that will be used to determine the nodal voltages. One technique that we will discuss in more detail next class is nodal analysis. This method results in a pair of simultaneous equations,

$$\left(\frac{1}{2000} + \frac{1}{4000} + \frac{1}{3000}\right) V_A - \left(\frac{1}{3000}\right) V_B = \frac{1}{2000} V_1$$

$$-\left(\frac{1}{3000}\right) V_A + \left(\frac{1}{3000} + \frac{1}{9000}\right) V_B = 0$$

- For V1 = 5V, solve the pair of equations and verify the previous answers.

Summary

LTspice is a very powerful simulation tool meant to address the circuit simulation needs of all engineers who must do circuit design and analysis. Thus, there are many, many opportunities to make what seem like silly mistakes that prevent the analysis from working properly. In your first attempt at using these tools, it is likely that you have already made some of these mistakes. You should also have heard about some of them in class. What mistakes did you make?

Report

For your report, follow the template proved on the course website. Be sure to include your hand-drawn circuit diagrams and fully annotate all plots so that the questions you are addressing can be easily answered using the plot alone rather than reading the accompanying text.